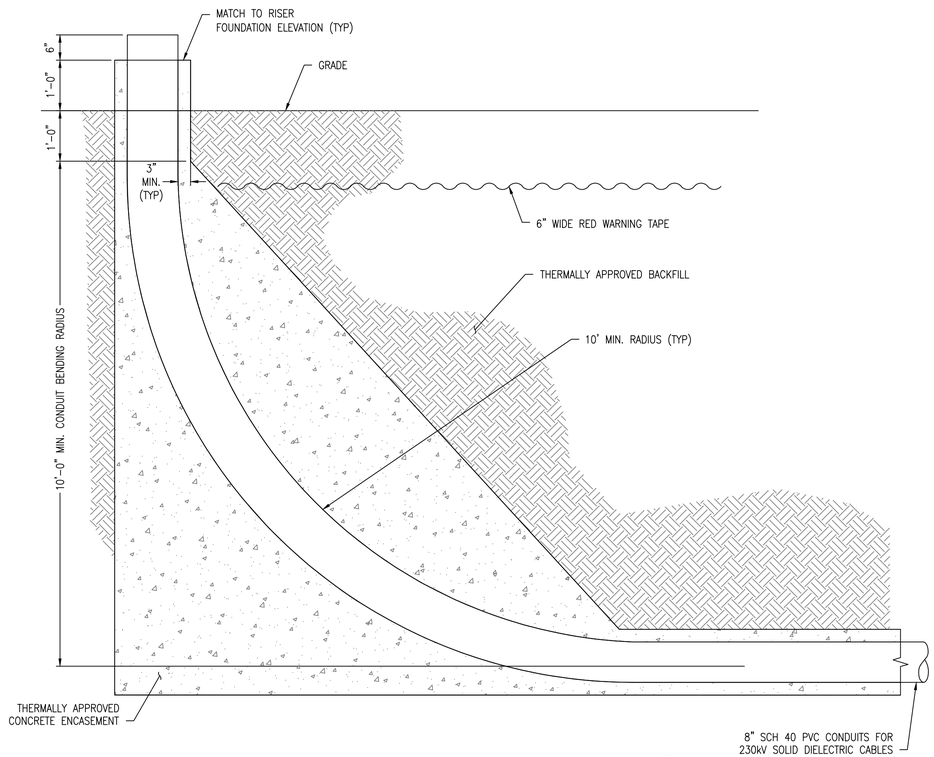

TYP PVC RISER SWEEP AT STRUCTURE (1 / U3-1)
N.T.S.

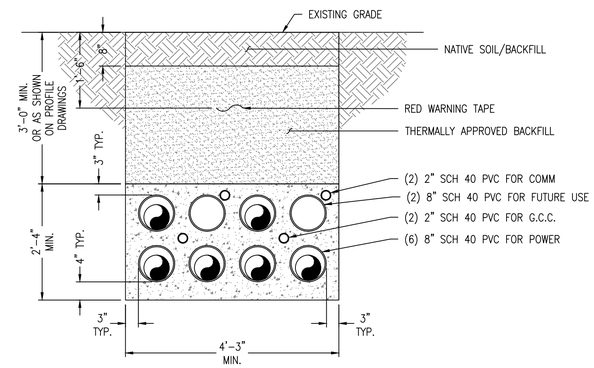

TYP 2X4 TRENCH (4 / U3-1)
N.T.S.

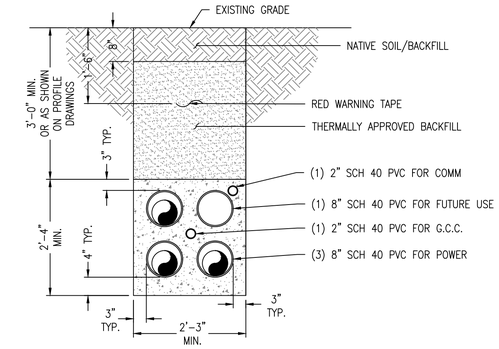

TYP 2X2 TRENCH (5 / U3-1)
N.T.S.

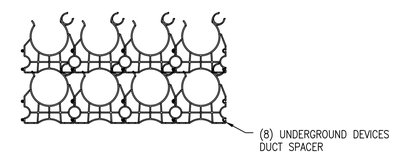

TYP 2x4 SPACER ARRANGEMENT
SCALE N.T.S.

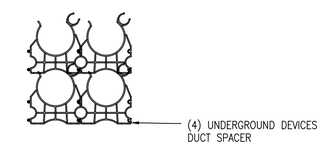

TYP 2x2 SPACER ARRANGEMENT
SCALE N.T.S.

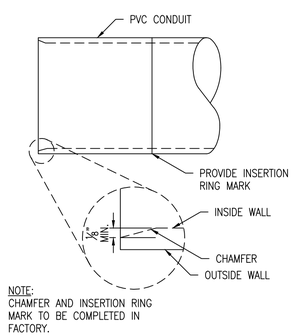

TYP PVC DUCT CHAMFER DETAIL (2 / U3-1)
N.T.S.

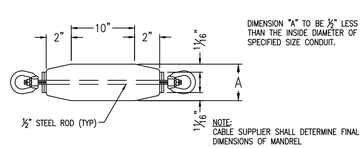

TYP MANDREL DETAIL (3 / U3-1)
N.T.S.

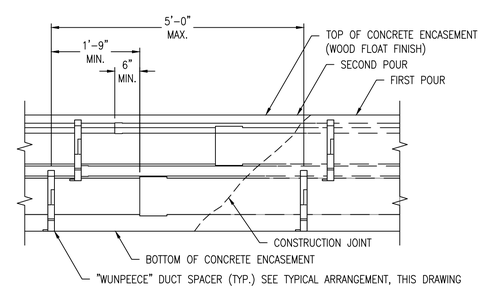

TYP 2x6 DUCT ELEVATION
SCALE N.T.S.

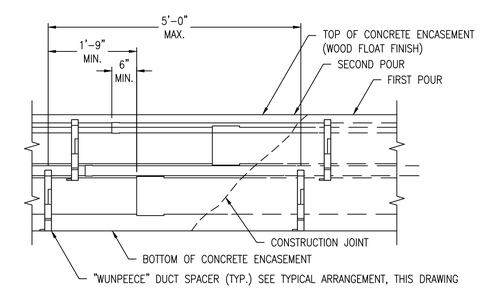

TYP 2x2 DUCT ELEVATION
SCALE N.T.S.

USAN 811
Northern California
811 or 800-642-2444

LS POWER GRID CALIFORNIA
POWER ENGINEERS

REV	REVISIONS	DATE	DRN	DSGN	CKD	APPD	REFERENCE DRAWINGS
C	ISSUED FOR 60% REVIEW	03/17/25	LAS	TSG	TSG		
B	ISSUED FOR 60% REVIEW	01/24/25	TGH	BWF	TSG		
A	ISSUED FOR 60% REVIEW	08/30/24	BPD	BWF	TSG		

DSGN	BWF	08/30/2024
DRN	BPD	08/30/2024
CKD	TSG	08/30/2024
SCALE:	N.T.S.	
FOR 22x34 DWG ONLY		

LS POWER GRID CALIFORNIA
PITTSBURGH TO COLLINSVILLE (ONSHORE) 230kV UNDERGROUND TRANSMISSION LINE
MISCELLANEOUS DETAILS

JOB NUMBER 0252342_0000
REV C
DRAWING NUMBER U3-1
SHEET 10 OF 10

Miscellaneous Details.dwg